SIREM

Innovation driver

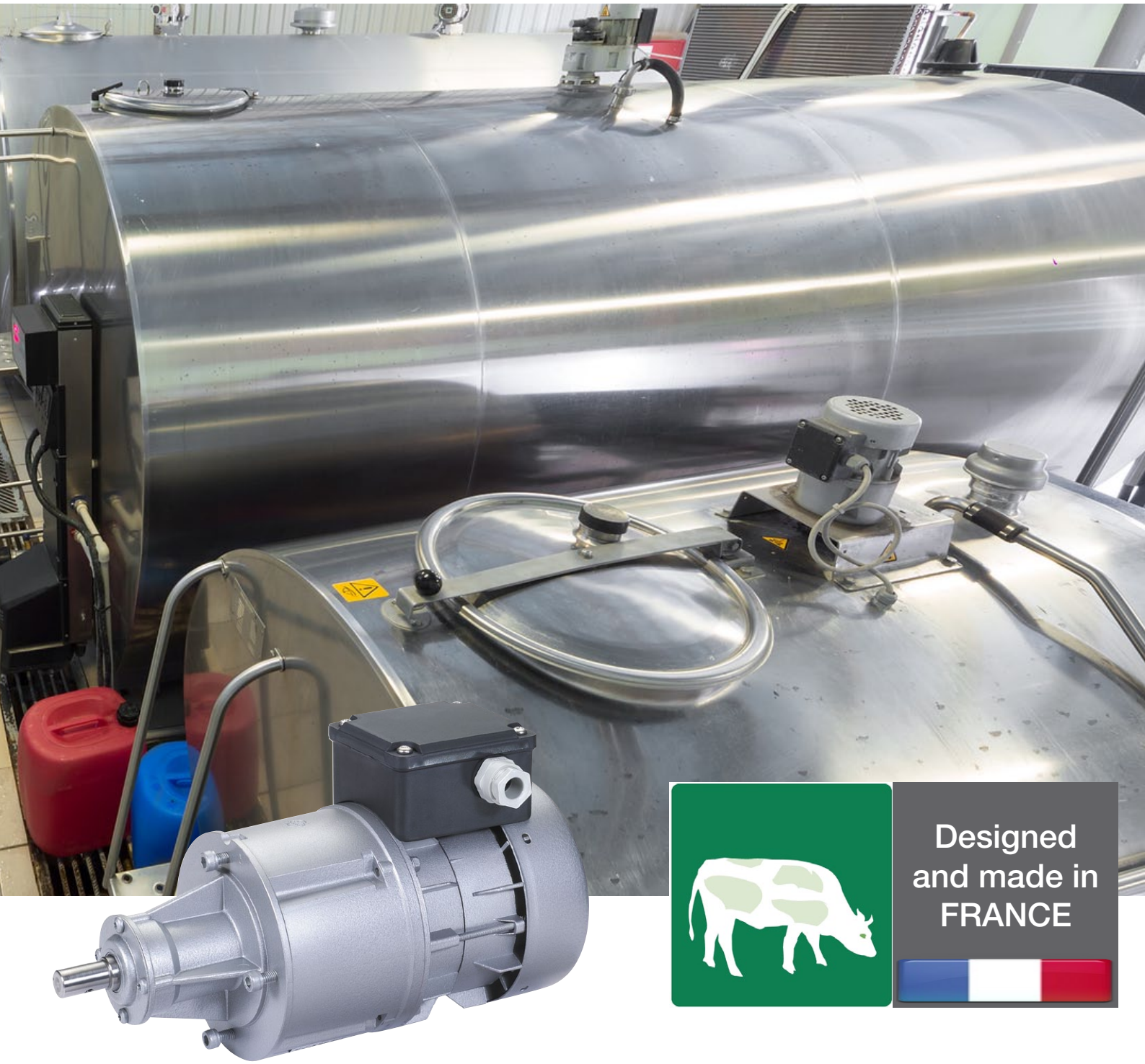

Designed and made in FRANCE

Gear motors and pumps catalog for milk tanks application

www.sirem.fr

Gear motors and pumps for the milk tank

Milk storage firstly requires the milk to be cooled homogeneously without impairing its qualities, then it must be maintained at a steady temperature of 3 to 4°C in a milk storage tank.

With over 40 years' experience in this market, SIREM works closely with all the largest worldwide manufacturers of milk coolers.

Our comprehensive range of robust and reliable motors and pumps cater for all tank models.

Whatever the constraints, the volume or shape of the tank or the distinctive agitator blade, SIREM manufactures the solution.

Furthermore, the largest coolers can be fitted with a SIREM pump for cleansing the tank, a critical component to ensure thorough hygiene after each emptying of the tank.

Choose your gear motor

	TANK CAPACITY*					
	250 litres	1 000 litres	3 000 litres	6 000 litres	8 000 litres	20 000 litres
F Gear motor	←	→				
D Gear motor		←	→			
H Gear motor		←	→			
L Gear motor			←	→		
M Gear motor			←	→		
N Gear motor			←	→		
P Gear motor					←	→

*Depending on the capacity different gear motors can be installed

Choose your pump

H Pump
Pressure > 2 bars

K Pump
Flow until 30m3/h

The integration of SIREM products in the milk tank application

Gear motor for milk stirring

The cooled milk requires the use of one or many low speed motorized agitators. The motorization choice depends on the volume of milk to stir, the shape of the tank and the specs of the agitator blades.

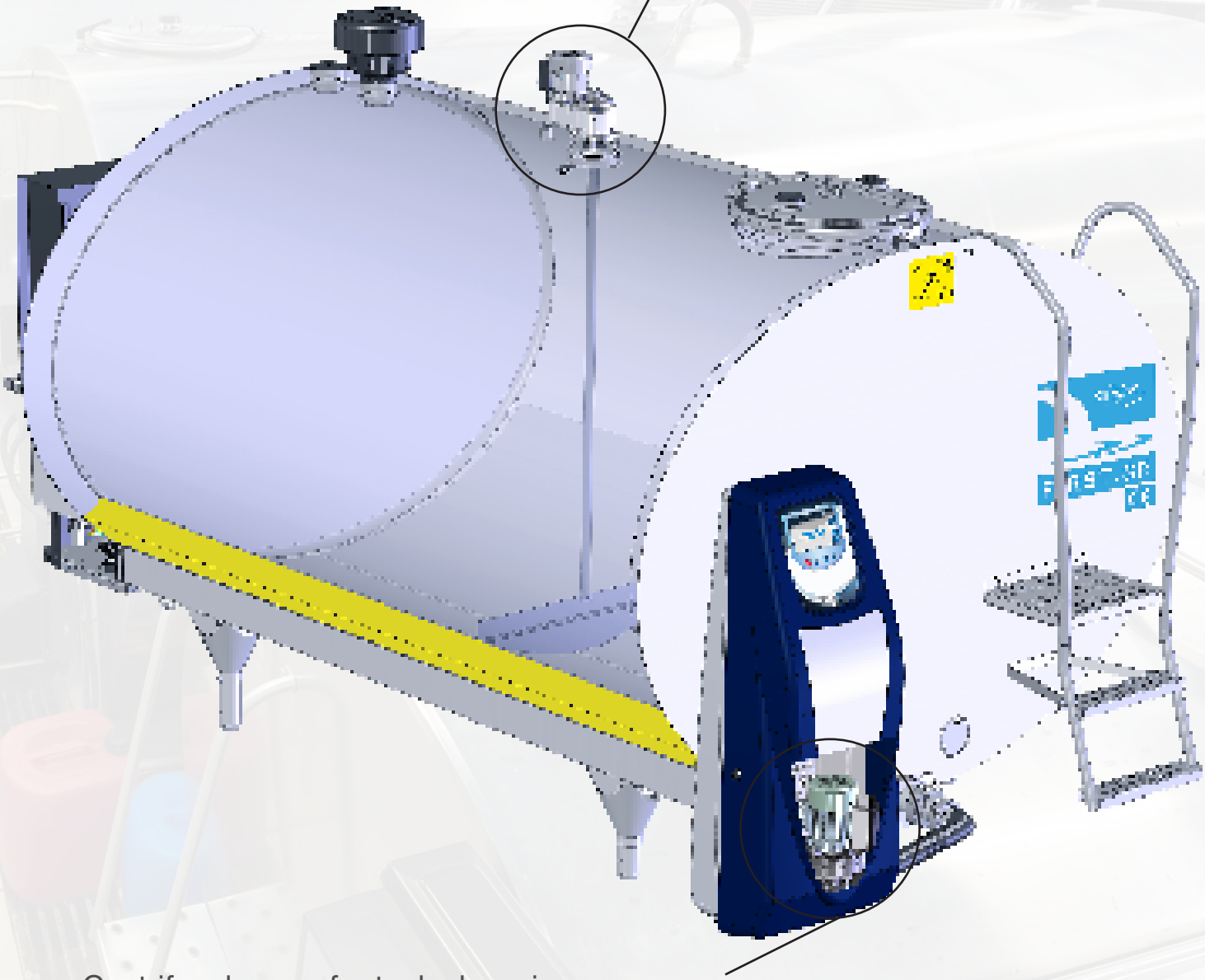

Centrifugal pump for tank cleansing

A pump, through a sprinkler, spray the detergent on the inner walls, then the rinsing water.
The pump body must be able to withstand high acidity levels and/or corrosive products.

SIREM

D TYPE - GEAR MOTOR

For tank from 1000 to 3000 liters

SPECIFICALLY DESIGNED FOR MILK AGITATION

EXCELLENT RESISTANCE TO THE AGITATOR'S SWINGING

OUTPUT SHAFT ACCORDING TO THE SPECIFICATIONS OF YOUR AGITATION BLADE

TECHNICAL FEATURES :

- 2 mountings available : see drawing
- 2 pole motor
- Class B insulation
- IP44 protection
- Single phase with capacitor or three phase
- Permanently lubricated
- 2 directions of rotation
- Thermal cut-out
- Terminal box : 4 positions

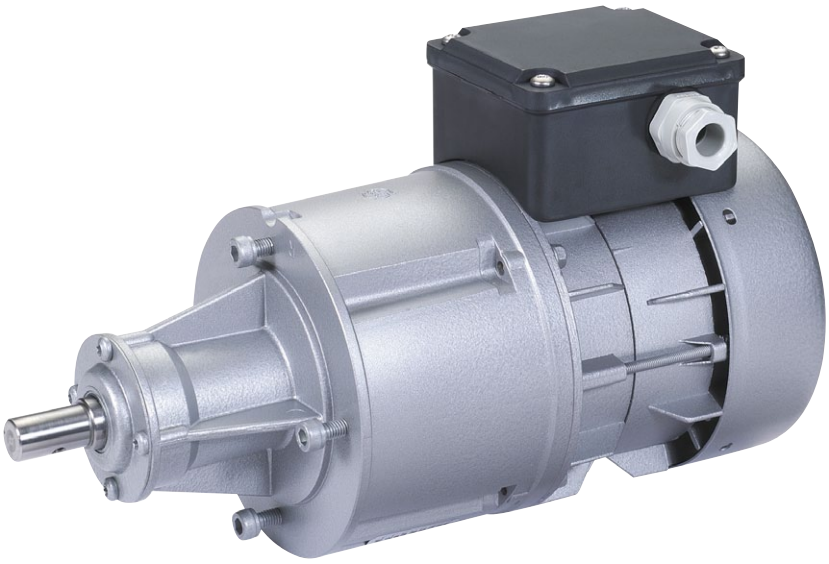

Technical features	Speed N2 RPM	Reduction ratio N2/N1	Nominal torque m.daN	Maximum load on slow shaft (1)		Weight Kg
				Radial daN	Axial daN	
R1C225DB	21	1/134	1,2	110	60	3,5
	25	1/108	0,97	100	54	
	30	1/96	0,87	95	50	
	39	1/72	0,66	90	46	
	48	1/59	0,54	84	42	
R3225DB	21	1/134	1,4	110	60	3,5
	25	1/108	1,1	100	54	
	30	1/96	1	95	50	
	39	1/72	0,76	90	46	
	48	1/59	0,62	84	42	

(1) Applied in the middle of the shaft end

Motor features	Single phase with capacitor 230V - 50Hz	Three phase 230/400V 50Hz	Nominal torque cm.N	Output power W	Speed N1 RPM	Current under 230V A	$\frac{IA}{IN}$	$\frac{Cd}{Cn}$	Cos
1C 225	•		13,4	38	2700	0,47	1,67	1,41	0,99
3 225		•	15,5	44	2700	0,29	2,45	0,97	0,82

D TYPE - GEAR MOTOR

For tank from 1000 to 3000 liters

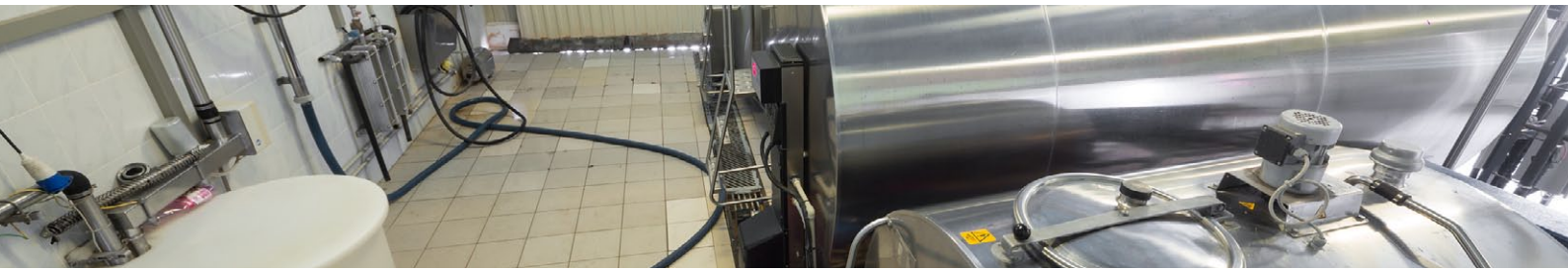

DIMENSIONS

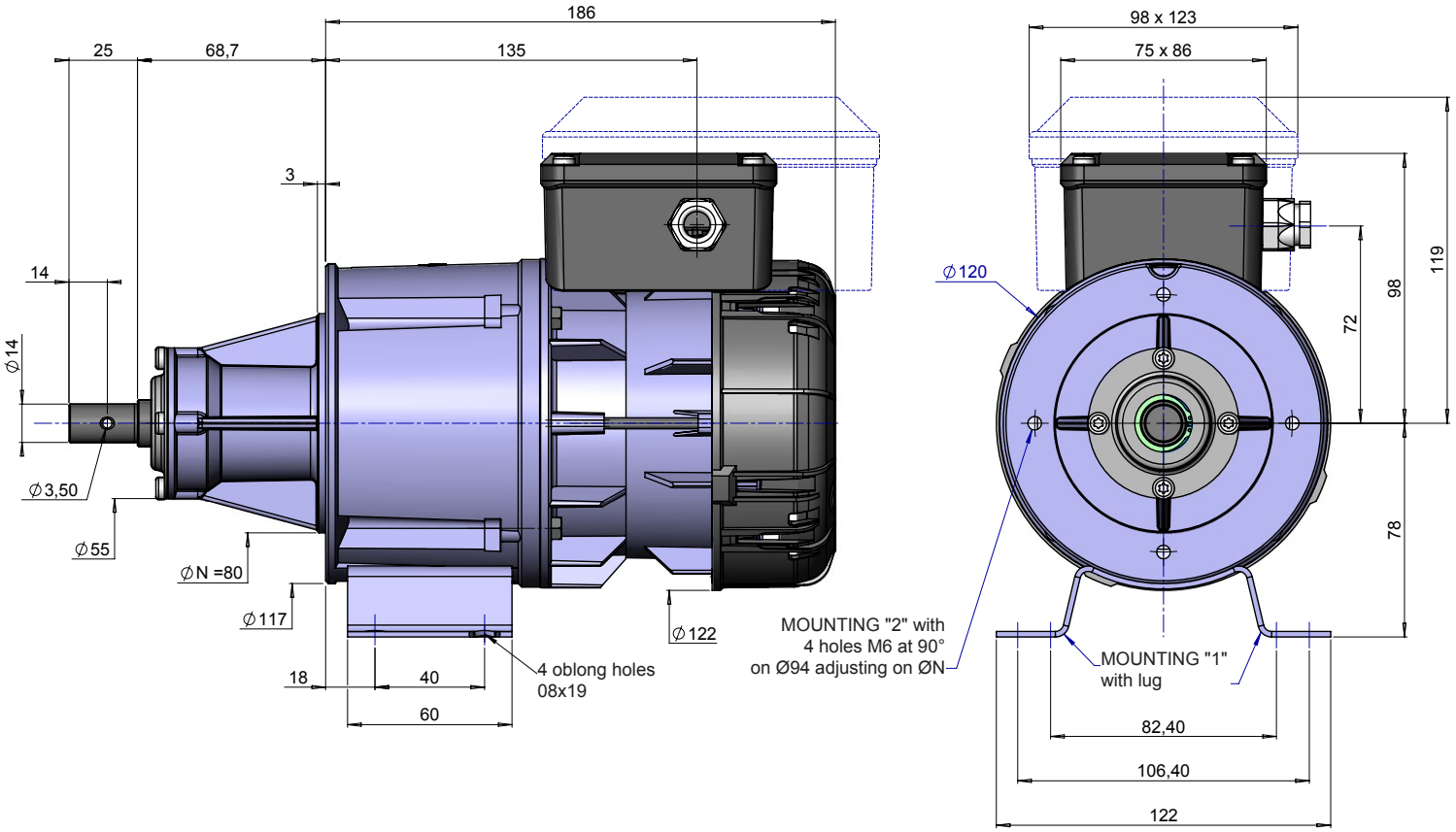

OPTIONS

- IP55 protection
- Class F insulation
- Output shaft according to your agitator specifications
- Special voltages and frequencies (60Hz and 50/60Hz)
- Safety circuit breaker (micro-switch incorporated in the terminal box)

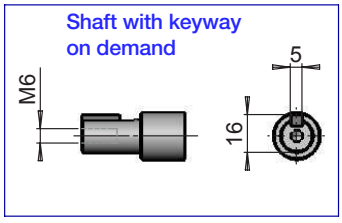

Terminal box positions

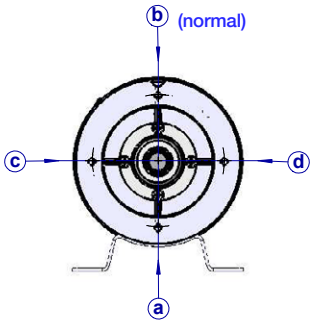

F TYPE - GEAR MOTOR

For tank from 250 to 1000 liters

SMALL AND COMPACT
OUTPUT SHAFT ACCORDING TO THE SPECIFICATIONS OF YOUR AGITATION BLADE

TECHNICAL FEATURES :

- 4 mountings available : see drawing
- 2 pole motor
- Class B insulation
- IP44 protection
- Single phase with capacitor
- Permanently lubricated
- 2 directions of rotation
- Thermal cut-out
- Terminal box 4 positions

Technical features	Speed N2 RPM	Reduction ratio N2/N1	Nominal torque m.daN	Maximal load on slowshaft (1)		Weight Kg
				Radial daN	Axial daN	
R1C225FB	21	1/127	1,14	77	49	2,7
	30	1/90	0,81	69	40	
	40	1/69	0,62	64	36	
	48	1/57	0,51	61	33	

(1) Applied in the middle of the shaft end

Motor features	Single phase with capacitor 230V - 50Hz	Three phase 230/400V 50Hz	Nominal torque cm.N	Output power W	Speed N1 RPM	Current under 230V A	IA/IN	Cd/Cn	Cos
1C 225	•		13,4	38	2700	0,47	1,67	1,41	0,99

F TYPE - GEAR MOTOR

For tank from 250 to 1000 liters

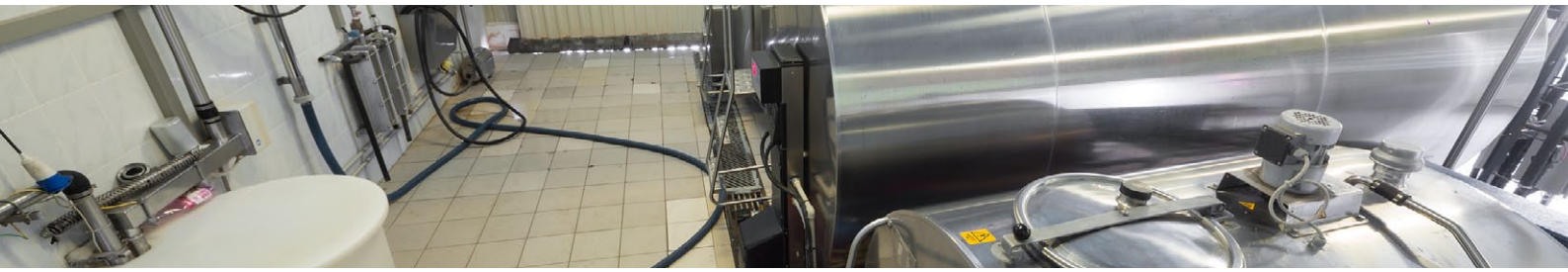

DIMENSIONS

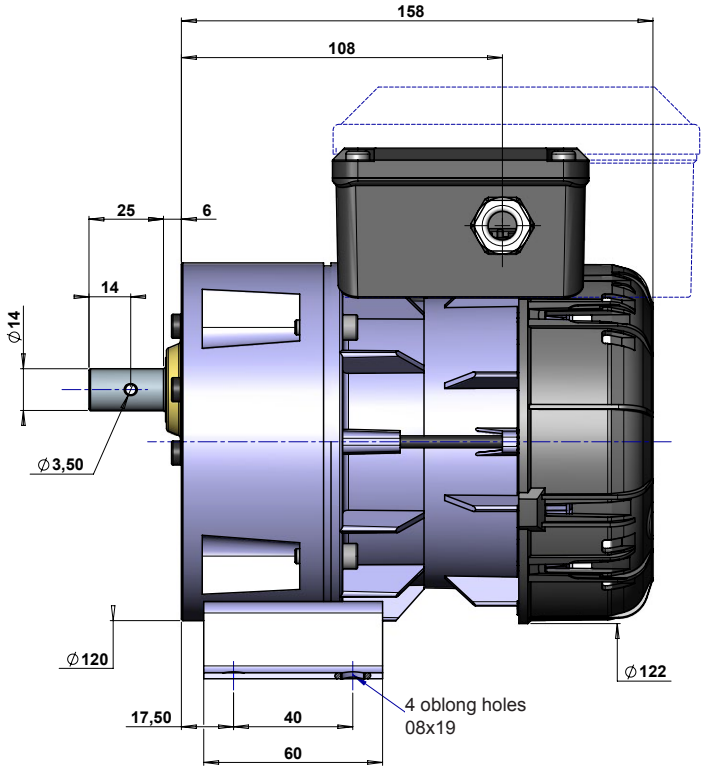

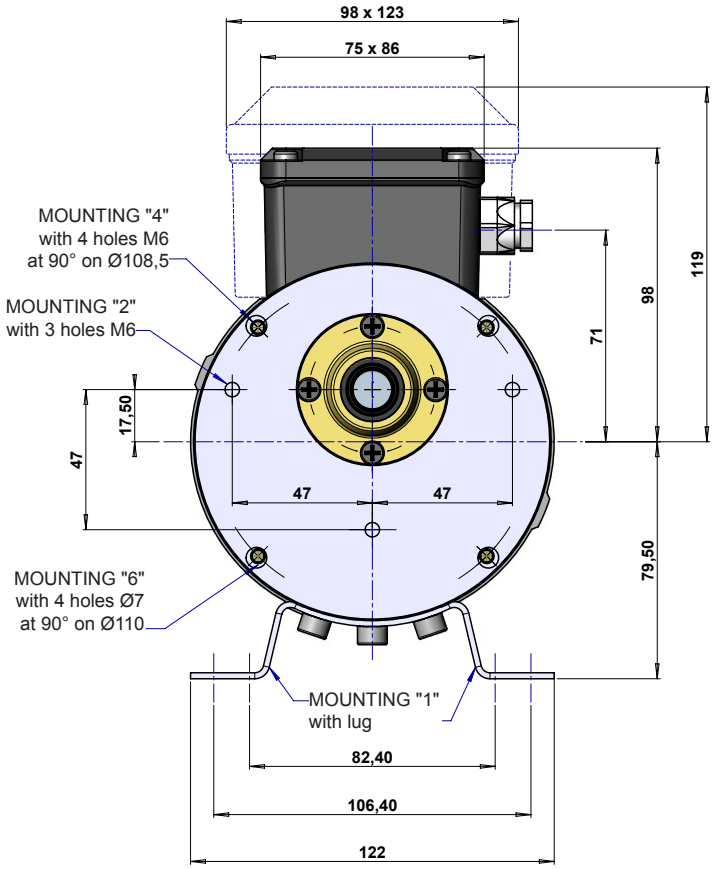

OPTIONS

- IP55 protection
- Class F insulation
- Output shaft according to your agitator specifications
- Special voltages and frequencies (60Hz and 50/60Hz)
- Three phase motor
- Safety circuit breaker (micro-switch incorporated in the terminal box)

Shaft with keyway
on demand

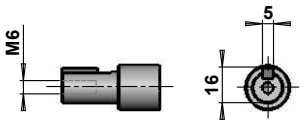

Terminal box positions

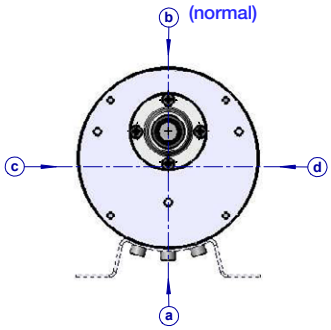

SIREM

H TYPE - GEAR MOTOR

For tank from 1000 to 3000 liters

SMALL AND COMPACT

CENTERED OUTPUT SHAFT

OUTPUT SHAFT ACCORDING TO THE SPECIFICATIONS OF YOUR AGITATION BLADE

TECHNICAL FEATURES :

- 2 mountings available : see drawing
- 2 pole motor
- Class B insulation
- IP44 protection
- Single phase with capacitor or three phase
- Permanently lubricated
- 2 directions of rotation
- Thermal cut-out
- Terminal box : 4 positions

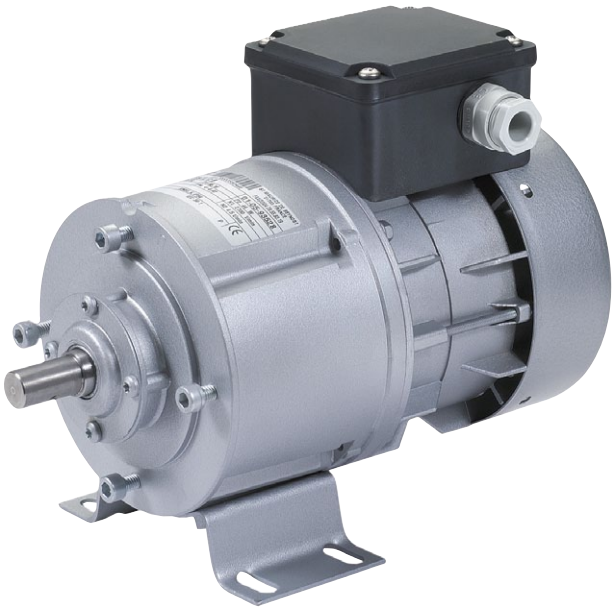

Technical features	Speed N2 RPM	Reduction ratio N2/N1	Nominal torque m.daN	Maximal load on slowshaft (1)		Weight Kg
				Radial daN	Axial daN	
R1C225HB	21	1/134	1,2	74	60	3,0
	30	1/96	0,87	64	50	
	39	1/72	0,66	60	46	
	48	1/59	0,54	56	42	
R3225HB	21	1/134	1,4	74	60	3,0
	30	1/96	1	64	50	
	39	1/72	0,76	60	46	
	48	1/59	0,62	56	42	

(1) Applied in the middle of the shaft end

Motor features	Single phase with capacitor 230V - 50Hz	Three phase 230/400V 50Hz	Nominal torque cm.N	Output power W	Speed N1 RPM	Current under 230 V A	$\frac{IA}{IN}$	$\frac{Cd}{Cn}$	Cos
1C 225	•		13,4	38	2700	0,47	1,67	1,41	0,99
3 225		•	15,5	44	2700	0,29	2,45	0,97	0,82

H TYPE - GEAR MOTOR

For tank from 1000 to 3000 liters

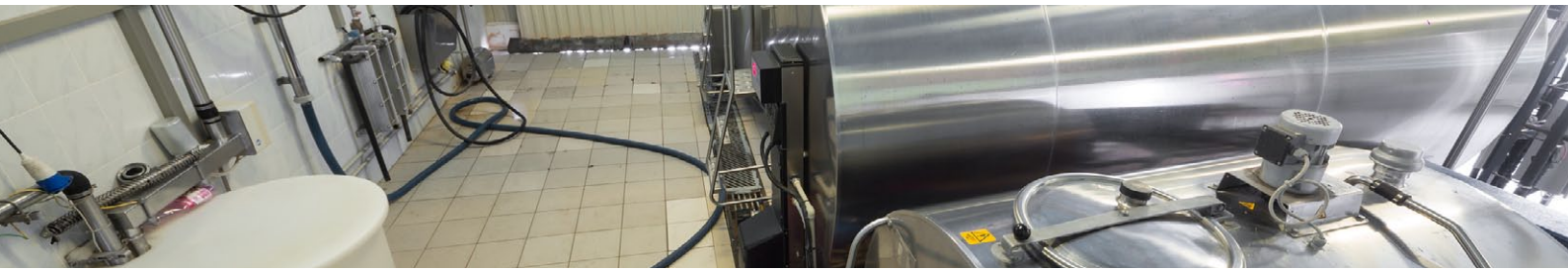

DIMENSIONS

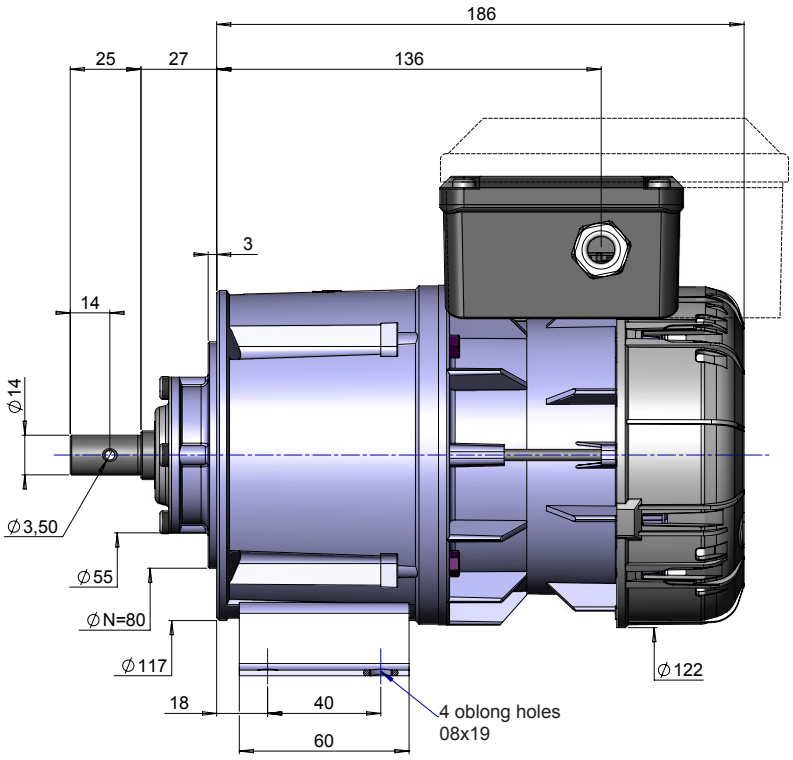

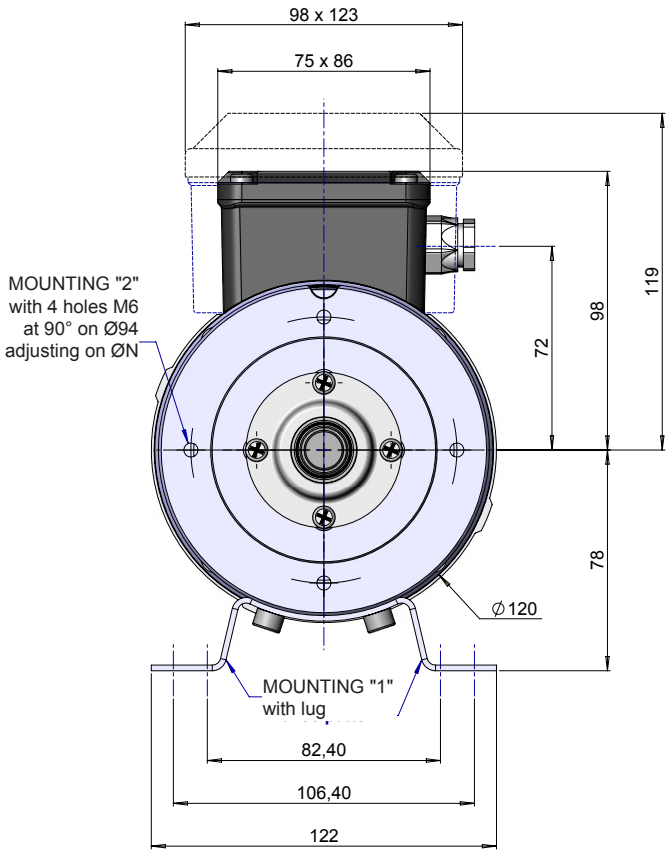

OPTIONS

- IP55 protection
- Class F insulation
- Output shaft according to your agitator specifications
- Special voltages and frequencies (60Hz and 50/60Hz)
- Safety circuit breaker (micro-switch incorporated in the terminal box)

Shaft with keyway on demand

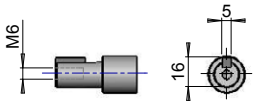

Terminal box positions

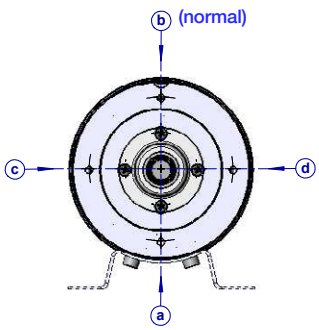

L TYPE - GEAR MOTOR

For tank from 3000 to 6000 liters

SMALL AND COMPACT, EASE MOUNTING

REINFORCED VERSION IN OPTION FOR MORE TORQUE

OUTPUT SHAFT ACCORDING TO THE SPECIFICATIONS OF YOUR AGITATION BLADE

TECHNICAL FEATURES :

- 3 mountings available including an off-center flange : see drawing
- 2 pole motor
- Class B insulation
- IP44 protection
- Single phase with capacitor or three phase
- Permanently lubricated
- 2 direction of rotation
- Thermal cut-out
- Terminal box : 4 positions

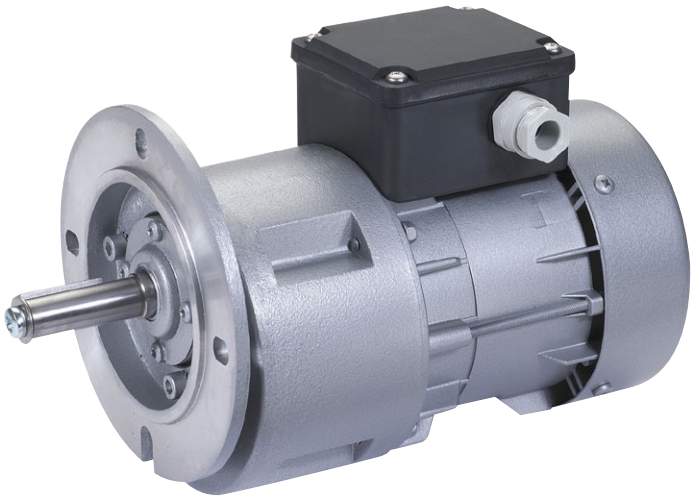

Technical features	Speed N2 RPM	Reduction ratio N2/N1	Nominal torque m.daN	Maximal load on slowshaft (1)		Weight Kg
				Radial daN	Axial daN	
R1C 245 LB R3 245 LB (three phase version)	21	1/125	2,5	94	60	3,5
	25	1/112	2,2	89	56	
	32	1/88	1,7	82	50	
	48	1/59	1,2	72	42	
R1C 245 LBR* R3 245 LBR (three phase version)*	21	1/125	5,2	94	60	3,5
	25	1/112	4,6	89	56	
	32	1/88	3,6	82	50	
	48	1/59	2,4	72	42	

* reinforced version
(1) Applied at 21mm from the shaft end

Motor features	Single phase with capacitor 230V - 50Hz	Three phase 230/400V 50Hz	Nominal torque cm.N	Output power W	Speed N1 RPM	Current under 230 V A	IA/IN	Cd/Cn	Cos
1C 245	•		24,2	71	2800	0,59	2,3	0,8	0,99
1C 245 R	•		51,2	145	2700	1,08	1,65	0,49	0,98
3 245		•	24,8	73	2800	0,42	3,25	0,97	0,79
3 245 R		•	51,2	145	2700	0,77	2,9	0,89	0,83

L TYPE - GEAR MOTOR

For tank from 3000 to 6000 liters

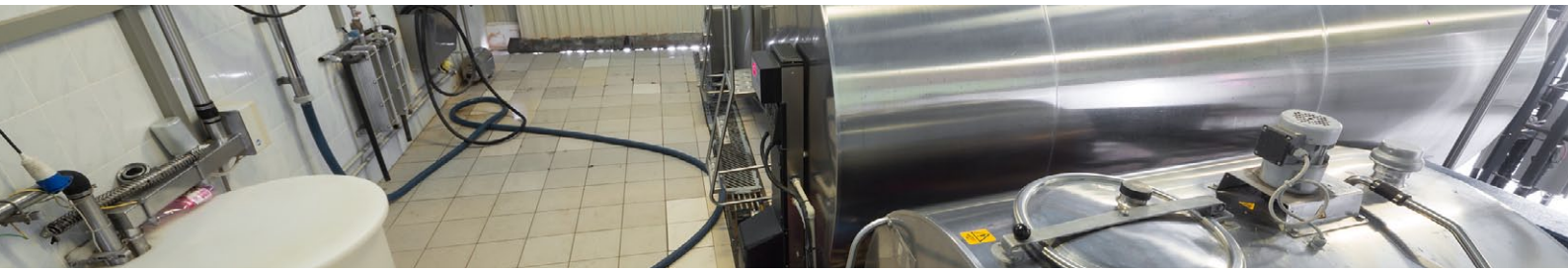

DIMENSIONS

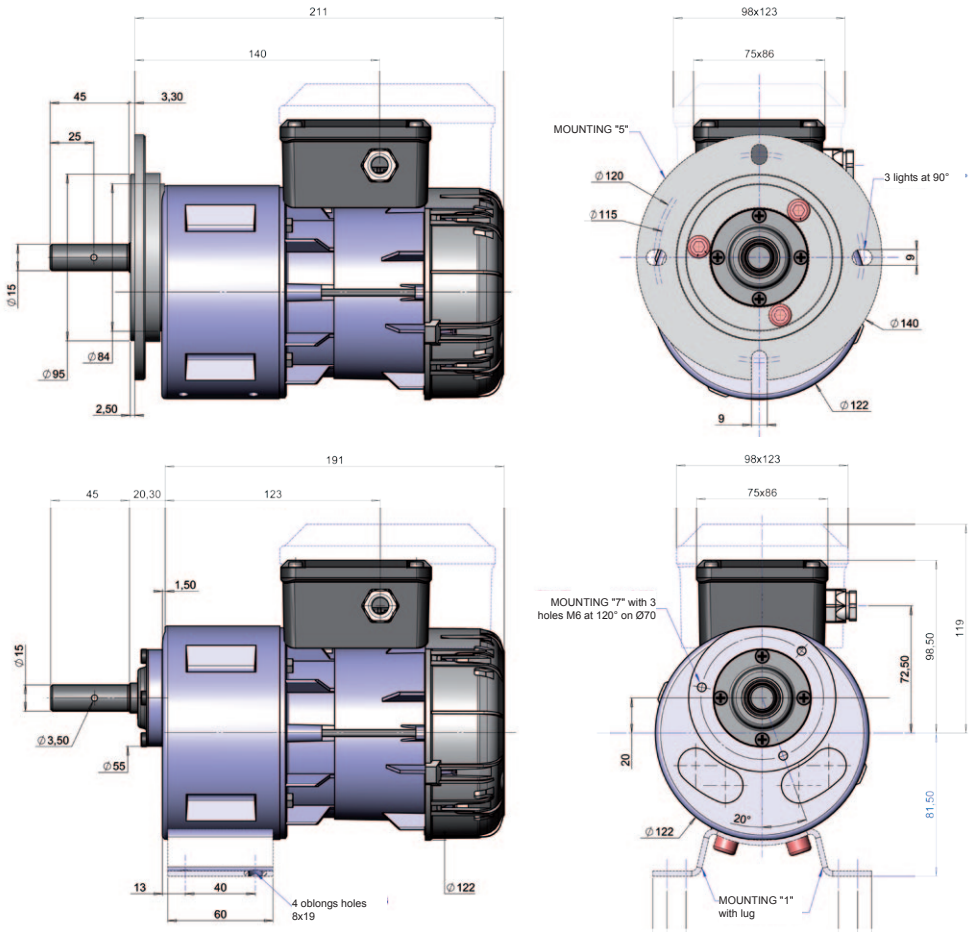

OPTIONS

- IP55 protection
- Class F insulation
- Output shaft according to your agitator specifications
- Special voltages and frequencies (60Hz and 50/60Hz)
- Reinforced motor (first gear in metal) for more torque

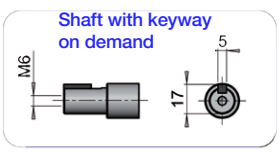

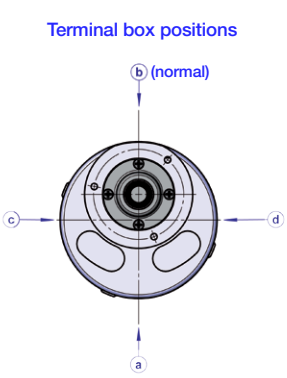

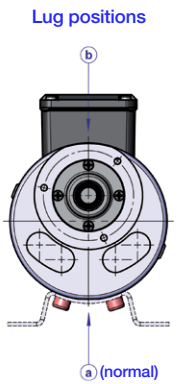

SIREM

M TYPE - GEAR MOTOR

For tank from 3000 to 6000 liters

SMALL AND COMPACT
REINFORCED VERSION IN OPTION FOR MORE TORQUE
OUTPUT SHAFT ACCORDING TO THE SPECIFICATIONS OF YOUR AGITATION BLADE

TECHNICAL FEATURES :

- 4 mountings available : see drawing
- 2 pole motor
- Class B insulation
- IP44 protection
- Single phase with capacitor or three phase
- Permanently lubricated
- 2 direction of rotation
- Thermal cut-out
- Terminal box : 4 positions

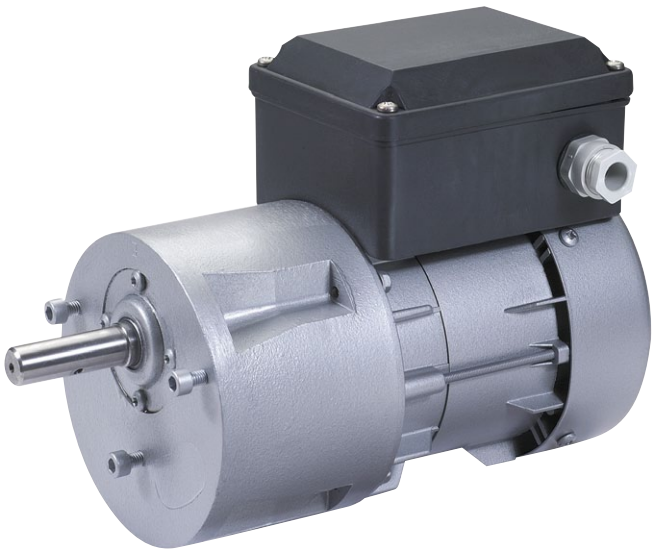

Technical features	Speed N2 RPM	Reduction ratio N2/N1	Nominal torque m.daN	Maximal load on slowshaft (1)		Weight Kg
				Radial daN	Axial daN	
R1C 245 MB R3 245 MB (three phase versions)	21	1/125	2,5	102	60	3,5
	25	1/112	2,2	96	56	
	32	1/88	1,7	88	50	
	48	1/59	1,2	78	42	
R1C 245 MBR* R3 245 MBR (three phase versions)*	21	1/125	5,2	102	60	3,5
	25	1/112	4,6	96	56	
	32	1/88	3,6	88	50	
	48	1/59	2,4	78	42	

* reinforced version
(1) Applied at 21mm from the shaft end

Motor features	Single phase with capacitor 230V - 50Hz	Three phase 230/400V 50Hz	Nominal torque cm.N	Output power W	Speed N1 RPM	Current under 230 V A	IA/IN	Cd/Cn	Cos
1C 245	•		24,2	71	2800	0,59	2,3	0,8	0,99
1C 245 R	•		51,2	145	2700	1,08	1,65	0,49	0,98
3 245		•	24,8	73	2800	0,42	3,25	0,97	0,79
3 245 R		•	51,2	145	2700	0,77	2,9	0,89	0,83

M TYPE - GEAR MOTOR

For tank from 3000 to 6000 liters

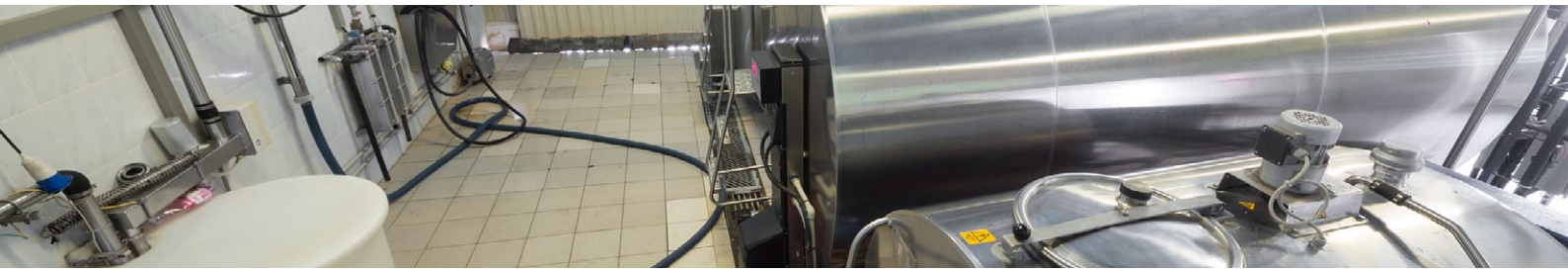

DIMENSIONS

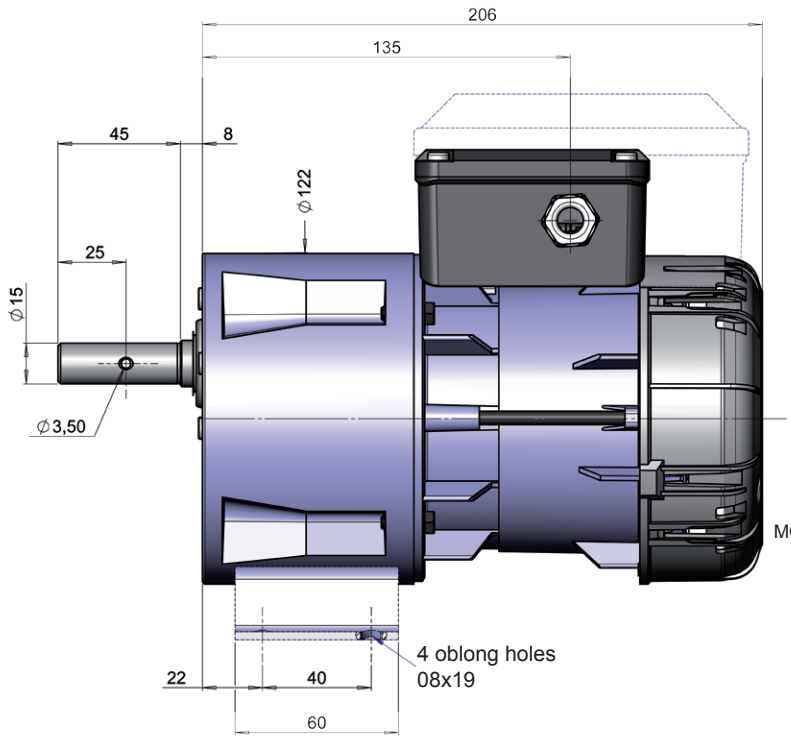

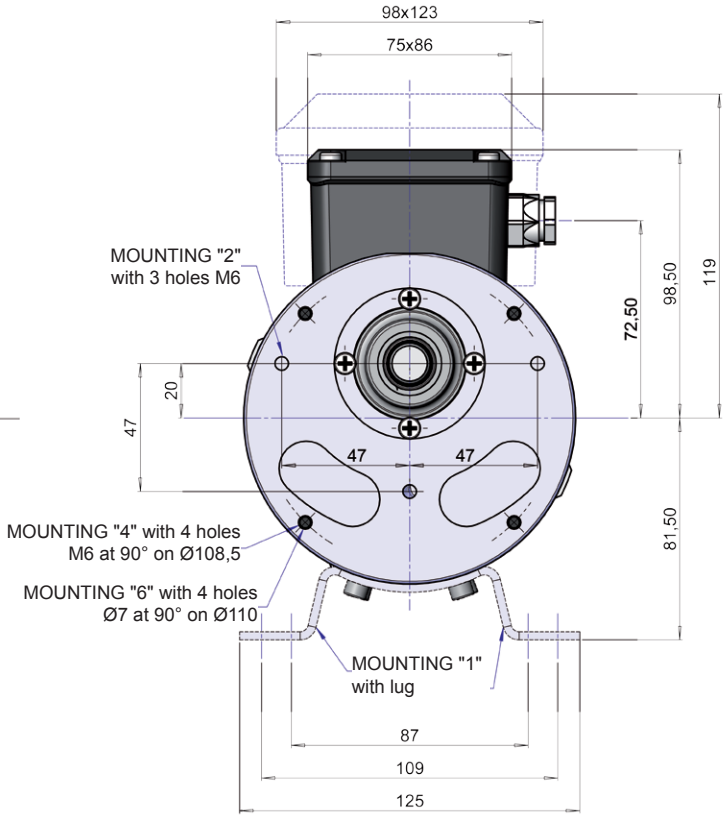

OPTIONS

- IP55 protection
- Class F insulation
- Output shaft according to your agitator specifications
- Special voltages and frequencies (60Hz and 50/60Hz)
- Reinforced motor (first gear in metal) for more torque

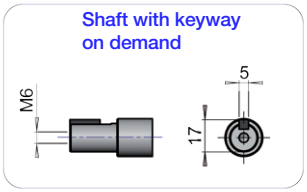

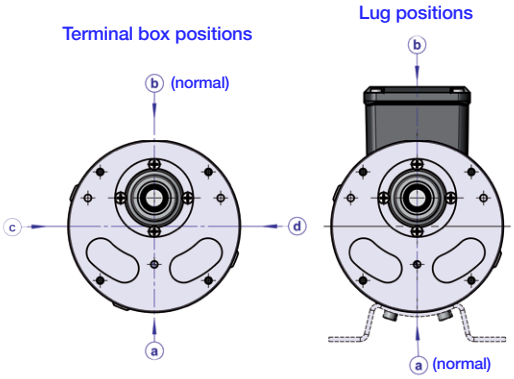

SIREM

N TYPE - GEAR MOTOR

For tank from 3000 to 8000 liters

SMALL AND COMPACT, EASE MOUNTING

REINFORCED VERSION IN OPTION FOR MORE TORQUE

OUTPUT SHAFT ACCORDING TO THE SPECIFICATIONS OF YOUR AGITATION BLADE

TECHNICAL FEATURES :

- 2 mountings available : see drawing
- Solid or hollow shaft
- 2 pole motor
- Class B insulation
- IP44 protection
- Single phase with capacitor or three phase
- Permanently lubricated
- 2 directions of rotation
- Thermal cut-out

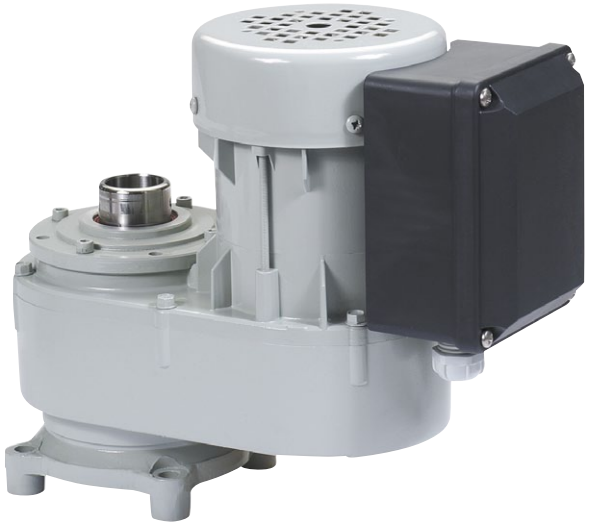

Technical features	Speed N2 RPM	Reduction ratio N2/N1	Nominal torque m.daN	Maximal load on slowshaft (1)		Weight Kg
				Radial daN	Axial daN	
R1C 245 NB R3 245 NB (three phase version)	21	1/126	2,5	160	102	6,5
	25	1/112	2,2	150	93	
	32	1/89	1,7	138	82	
	48	1/59	1,2	122	69	
R1C 245 NBR* R3 245 NBR (Three phase version)*	21	1/126	5,2	160	102	6,5
	25	1/112	4,6	150	93	
	32	1/89	3,6	138	82	
	48	1/59	2,4	122	69	

* reinforced version

(1) Applied at 21mm from the shaft end

Motor features	Single phase with capacitor 230V - 50Hz	Three phase 230/400V 50Hz	Nominal torque cm.N	Output power W	Speed N1 RPM	Current under 230 V A	$\frac{IA}{IN}$	$\frac{Cd}{Cn}$	Cos
1C 245	•		24,2	71	2800	0,59	2,3	0,8	0,99
1C 245 R	•		51,2	145	2700	1,08	1,65	0,49	0,98
3 245		•	24,8	73	2800	0,42	3,25	0,97	0,79
3 245 R		•	51,2	145	2700	0,77	2,9	0,89	0,83

N TYPE - GEAR MOTOR

For tank from 3000 to 8000 liters

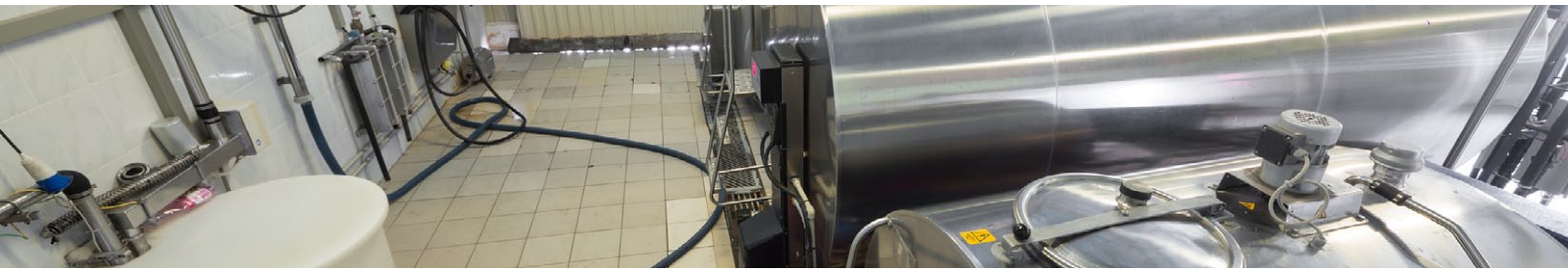

DIMENSIONS

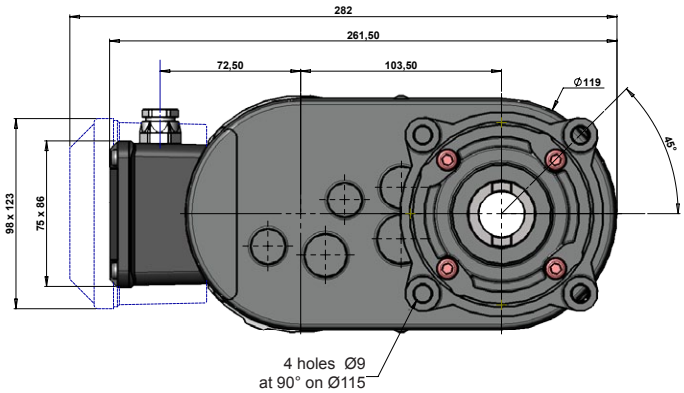

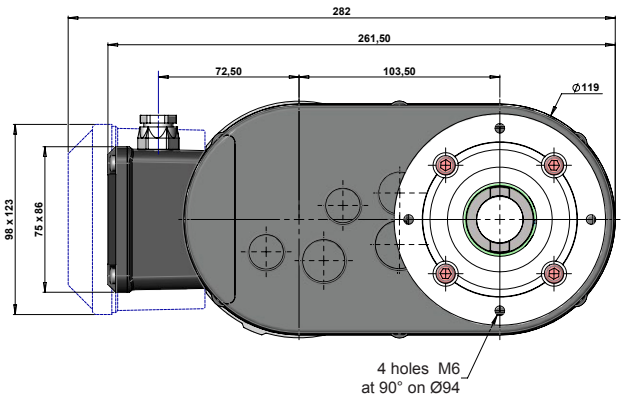

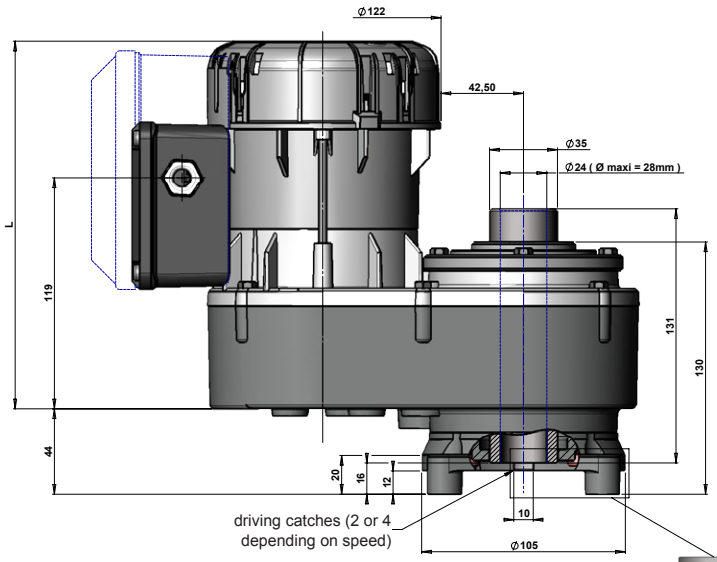

MOUNTING N5

Iron height	Lenght L
25	169,5
45	189,5

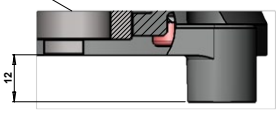

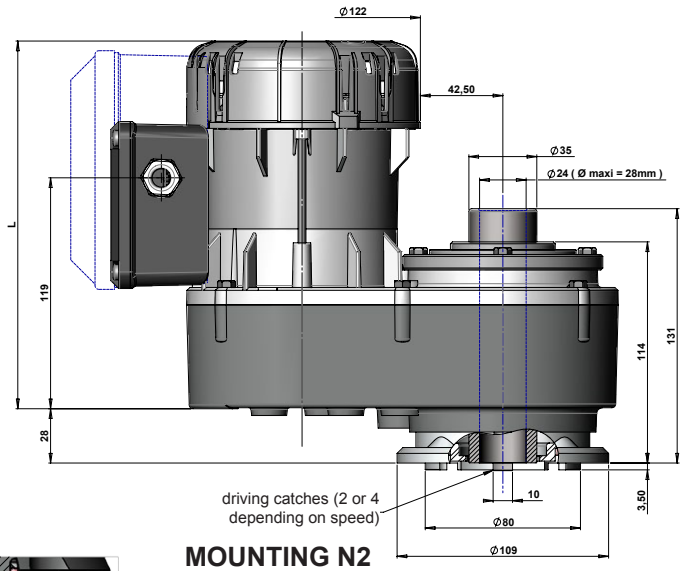

MOUNTING N2

OPTIONS

- IP55 protection
- Class F insulation
- Output shaft according to your agitator specifications
- Special voltages and frequencies (60Hz and 50/60Hz)
- Washing system
- Reinforced motor (first gear in metal) for more torque

SIREM

P TYPE - GEAR MOTOR

For tank from 8000 to 20 000 liters

SMALL AND COMPACT, EASE MOUNTING

EXCELLENT RESISTANCE TO THE AGITATORS'S SWINGING

OUTPUT SHAFT ACCORDING TO THE SPECIFICATIONS OF YOUR AGITATION BLADE

TECHNICAL FEATURES :

- 2 mountings available : see drawing
- Solid or hollow shaft
- 2 pole motor
- Class F insulation
- IP44 protection
- Single phase with capacitor or three phase
- Permanently lubricated
- 2 directions of rotation
- Thermal cut-out

Technical features	Speed N2 RPM	Reduction ratio N2/N1	Nominal torque m.daN (2)	Maximal load on slowshaft (1)		Weight Kg
				Radial daN	Axial daN	
R1C 250 PB	23	1/120	8,5	175	95	10
R3 250 PB (version triphasée)	32	1/86	6,2	160	82	

(1) Applied at 21mm from the shaft end
(2) Maximal torque not to exceed

Motor features	Single phase with capacitor 230V - 50Hz	Three phase 230/400V 50Hz	Nominal torque cm.N	Output power W	Speed N1 RPM	Current under 230 V A	$\frac{IA}{IN}$	$\frac{Cd}{Cn}$	Cos
1C 250	•		76	220	2750	1,67	1,84	0,67	0,85
3 250		•				0,90	4,2	2,5	0,86

P TYPE - GEAR MOTOR

For tank from 8000 to 20 000 liters

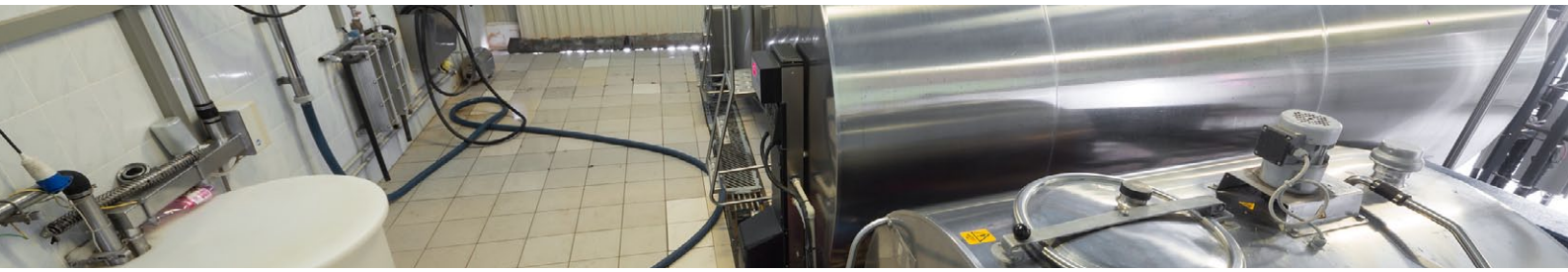

DIMENSIONS

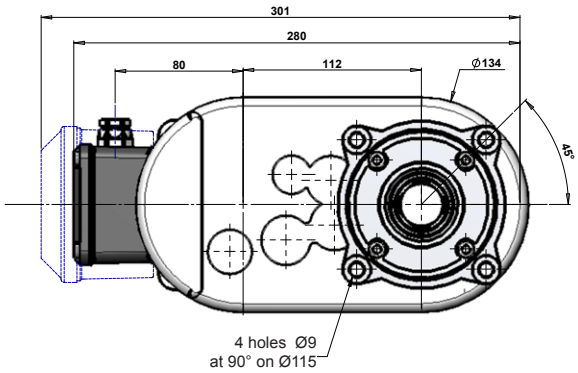

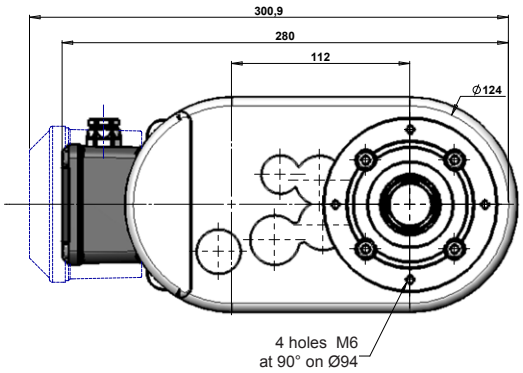

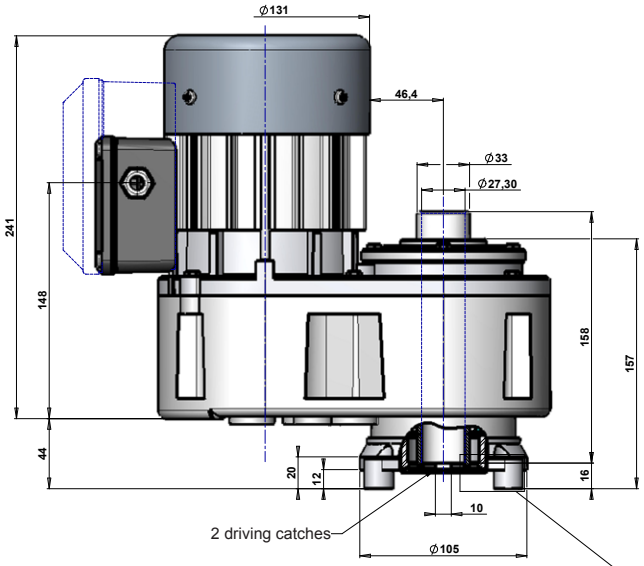

MOUNTING N5

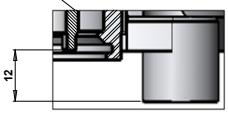

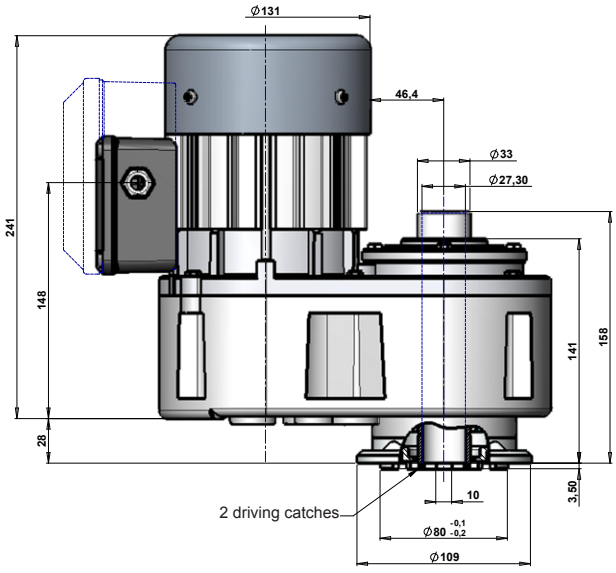

MOUNTING N2

OPTIONS

- IP55 protection
- Output shaft according to your agitator specifications
- Special voltages and frequencies (60Hz and 50/60Hz)
- Weshing system

K TYPE - CENTRIFUGAL PUMP

Flow until 30m³

HIGH FLOW PUMP UNTIL 30M³

SINGLE OR THREE PHASE VERSION

TECHNICAL FEATURES :

- Polypropylène pump housing
- Capacitor inside the terminal box
- Nitril mechanical seal
- 8 outlet positions
- Terminal box : 5 positions
- Polyamide 6 impeller
- 3 drain plug positions
- Class F insulation
- Single or three phase motor

1	PB 1C 250 KB PB 3 250 KB	Impeller Ø 88
2	PB 1C 270 KB PB 3 270 KB	Impeller Ø 107
3		Impeller Ø 100
4		Impeller Ø 93
5	PB 1C 285 KB PB 3 285 KB	Impeller Ø 107
6		Impeller Ø 100
7	PB 1C 80 KB PB 3 80 KB	Impeller Ø 107

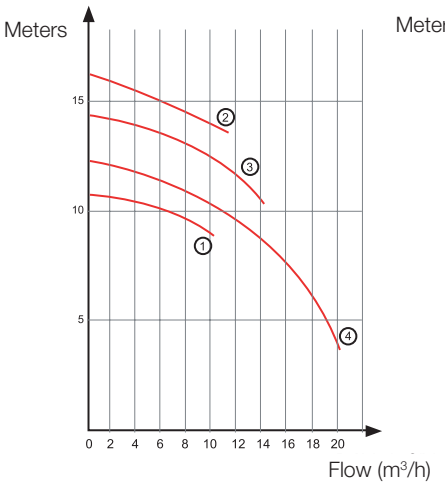

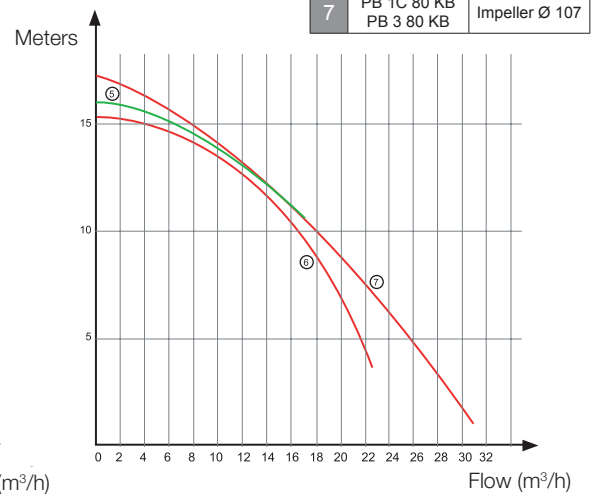

COMPLY WITH STANDARDS :

- These pumps meet the standards and guidelines in force
- EN 60335-1
- EN 60335-2-41

Model	Single phase with capacitor 230V - 50Hz	Three phase 230/400V 50Hz	Inlet power W	Output power W	Current 230V - A	Cos φ
PB 1C250 K4B	•		560	400	2,50	0,98
PB 3250 K4B		•	560	400	1,85	0,75
PB 1C270 K4B	•		900	600	3,95	0,98
PB 3270 K4B		•	875	600	2,95	0,74
PB 1C285 K4B	•		1150	810	5,10	0,98
PB 3285 K4B		•	985	800	3,40	0,73
PB 1C80 K1B	•		1350	1100	6,10	0,96
PB 80 K1B		•	1360	1100	4,20	0,81

K TYPE - CENTRIFUGAL PUMP

Flow until 30m³

DIMENSIONS

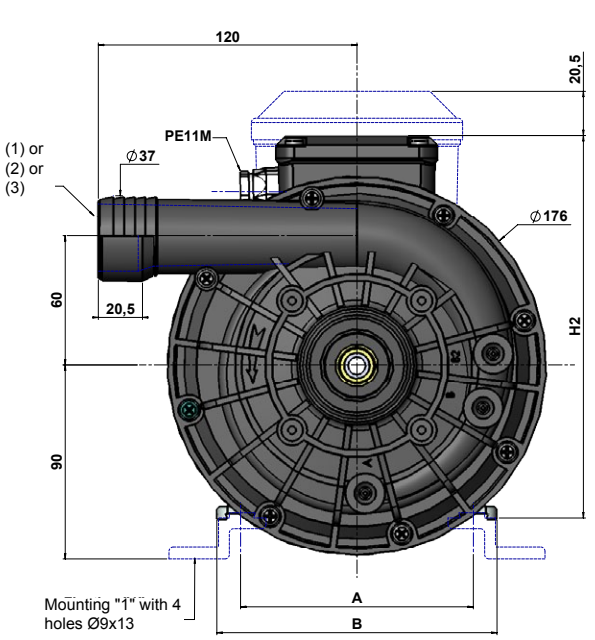

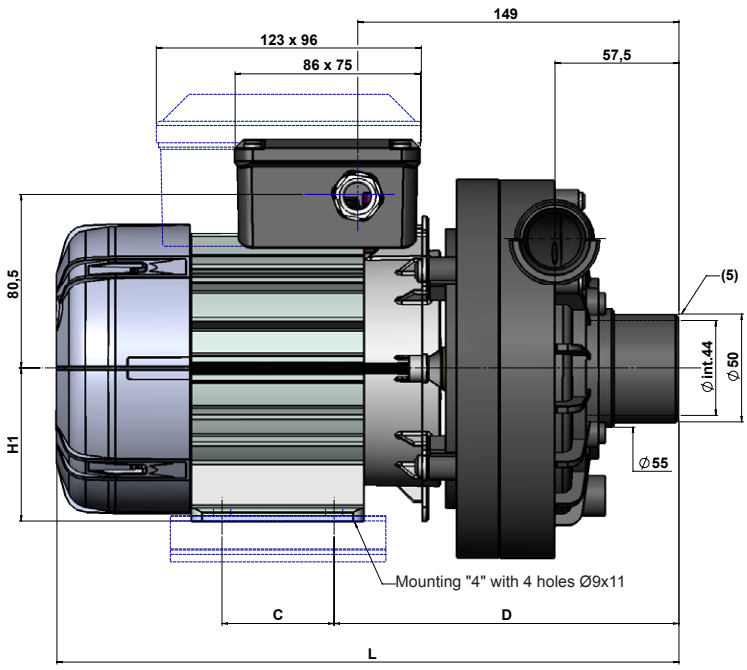

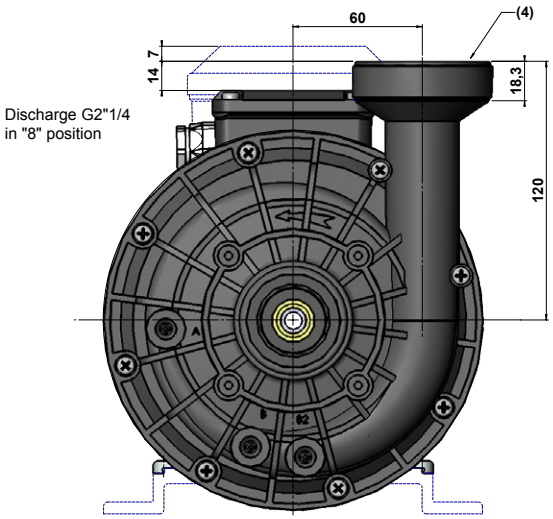

Ø Discharge :

(1) - Ribed Ø ext. 37 - Ø int. 29,3 connection on smooth pipe
(2) - On request : Threaded Ø ext. G1"¼ male - Ø int. 33
(3) - On request : Threaded Ø ext. G1"½ male - Ø int. 37
(4) - On request : Threaded Ø ext. G2"¼ male - Ø int. 50

Ø Suction :

(5) - On request : Threaded Ø int. G1"½female

Dimensions (mm) / *Pumps*	L	A	B	C	D	H1	H2
PB 1C250 PB 3250	278	108	130	32	160,5	71	177,5
PB 1C270 PB 3270	288	108	130	52	160,5	71	177,5
PB 1C285 PB 3285	301	108	130	67	160,5	71	177,5
PB 1C80 PB 80	323	125	147	100	155,5	80	186,5

OPTIONS

- Special voltages and frequencies (60Hz and 50/60Hz)
- IP55 protection

Outlet position in relation to the lug

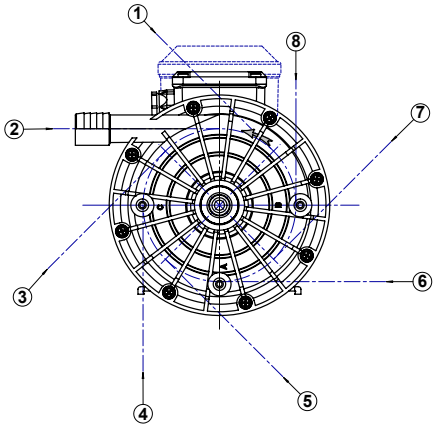

Position of the terminal box in relation to the lug

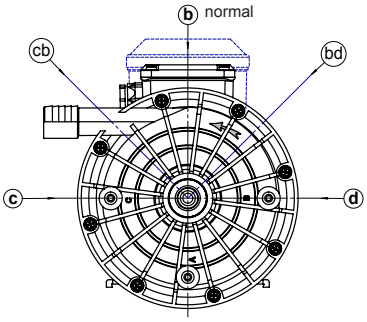

H TYPE - CENTRIFUGAL PUMP

Pressure until 2 bars

HIGH PRESSURE PUMP UNTIL 2 BARS
SINGLE OR THREE PHASE VERSION

TECHNICAL FEATURES :

- Polypropylène pump housing
- Capacitor inside the terminal box
- Nitril mechanical seal
- 8 outlet positions
- Terminal box : 5 positions
- Polyamide 6 impeller
- 3 drain plug positions
- Class F insulation
- Single or three phase motor

Meters

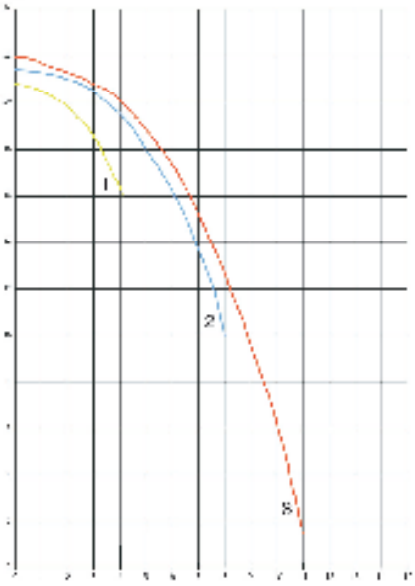

Flow (m^3/h)

COMPLY WITH STANDARDS :

- These pumps meet the standards and guidelines in force
- EN 60335-1
- EN 60335-2-41

Model	Curves	Single phase with capacitor 230V - 50Hz	Three phase 230/400V 50Hz	Inlet power W	Output power W	Current 230V - A	Cos φ	Ø Impeller mm
PB 1C250 H4B	1	•		560	400	2,50	0,98	120
PB 3250 H4B			•	560	400	1,85	0,75	
PB 1C270 H4B	2	•		900	600	3,95	0,98	
PB 3270 H4B			•	875	600	2,95	0,74	
PB 1C285 H4B	3	•		1150	810	5,10	0,98	
PB 3285 K4B			•	985	800	3,40	0,73	

H TYPE - CENTRIFUGAL PUMP

Pressure until 2 bars

DIMENSIONS

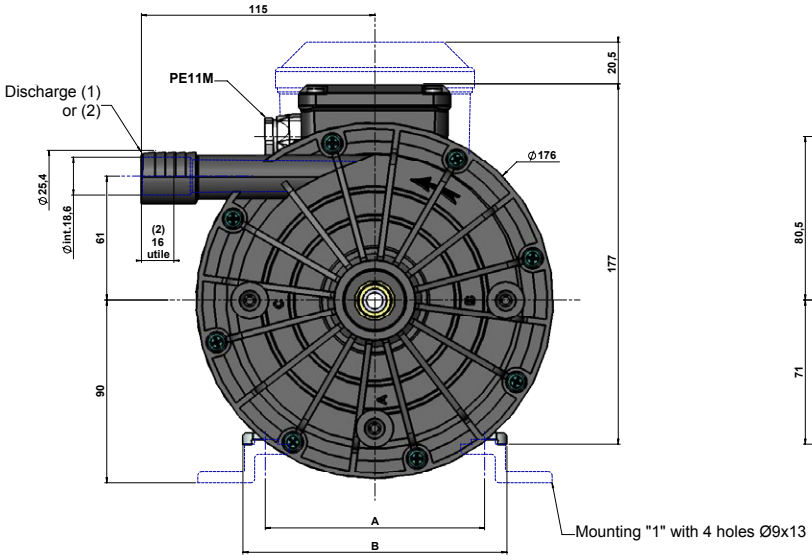

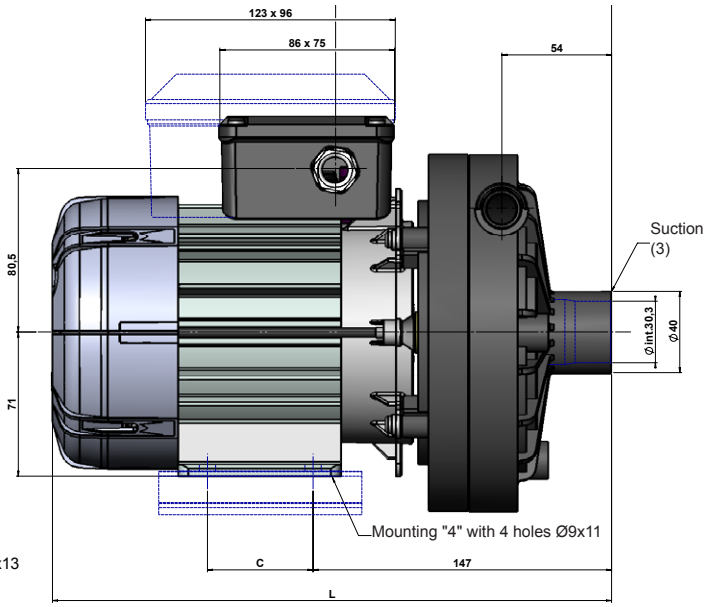

Ø Discharge :
(1) - Connection on smooth pipe
(2) - On request : Threaded Ø ext. G¾" male

Ø Suction :
(3) - On request : Threaded Ø int. G1" female

Dimensions (mm) / *Pumps*	L	A	B	C
PB 1C250 PB 3250	255	108	130	32
PB 1C270 PB 3270	275	108	130	52
PB 1C285 PB 3285	290	108	130	67

OPTIONS

- Special voltages and frequencies (60Hz and 50/60Hz)
- IP55 protection

Outlet position in relation to the lug

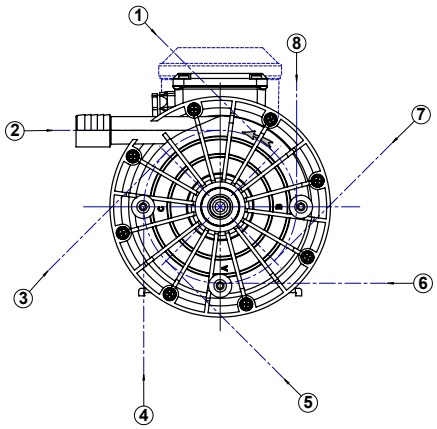

Position of the terminal box in relation to the lug

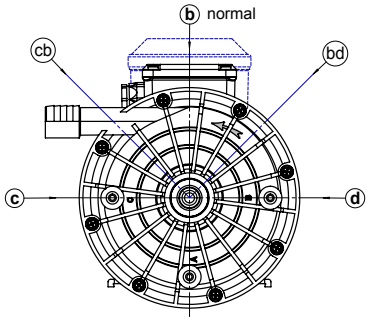

SIREM

Chemin du Pilon - 01700 Saint Maurice de Beynost - FRANCE
Tél. +33 (0)4 78 55 83 00 - Fax. +33(0)4 78 55 53 19
www.sirem.fr - info@sirem.fr

Juin 2016 - SIREM - Milk_Tank_Catalog_EN_2016_rev1.0